NEW CTP BUCKETS
FOR 311, 315 & 336 EXCAVATORS
JUST ARRIVED!

CTP EXCAVATOR BUCKETS

CTP Heavy Duty Buckets are specially engineered for excavating in the harshest conditions. Designed for digging in various materials, including dirt, clay, rock, and high abrasive applications. The Q355 high-strength steel shell increases strength for supporting stress and heavy loads.
With a yield strength of 345 MPa (megapascal) and a tensile strength of 450 Mpa. Q355 steel offers outstanding longevity, performance, and stability.

FEATURES INCLUDE:

- Designed with heavy-duty Q355 high strength structural steel
- Included with standard Adapters for J Series Style Teeth
- Bottom wear pads are standard
- End Bits included on the 320 buckets
- Optional Bucket Side Bar Protectors
- Optional Sidecutters Wear Pads
- Optional Wear Buttons and Chocky Bars available

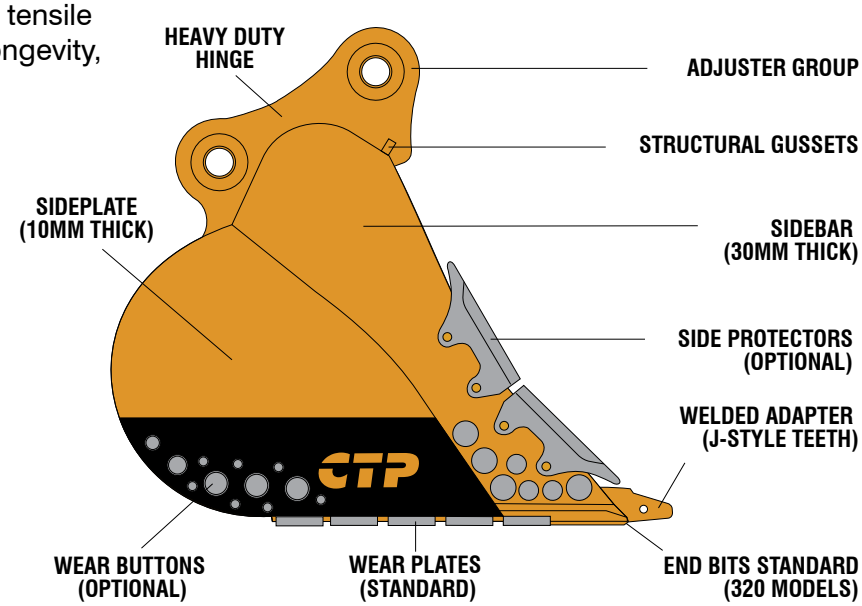

* Other part no. not included in the list are available. Please contact your sales representative if you have any questions. Part Numbers are used for reference purposes only.

Quality with Value Guaranteed™

NEW
CTP-311 STANDARD

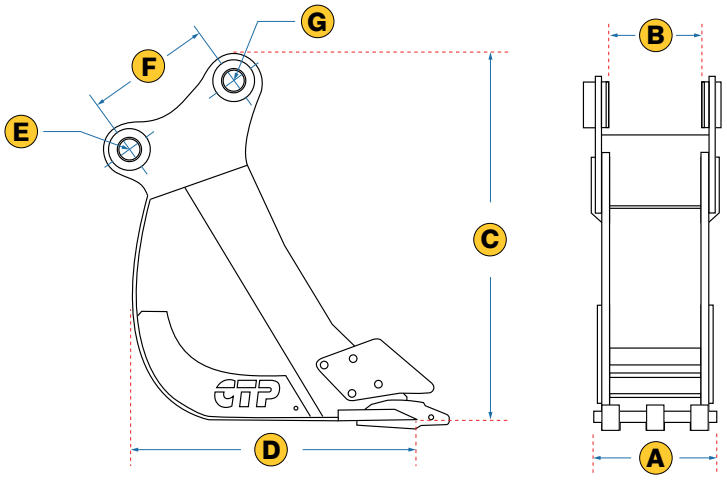

Part No.	A	B	C	D	E	F	G
CTP-311-ST-12	305	221	1111	1308	65	407	65
CTP-311-ST-18	440	221	1111	1308	65	407	65
CTP-311-ST-24	610	221	1111	1308	65	407	65
CTP-311-ST-30	760	221	1111	1308	65	407	65

NEW
CTP-315 STANDARD

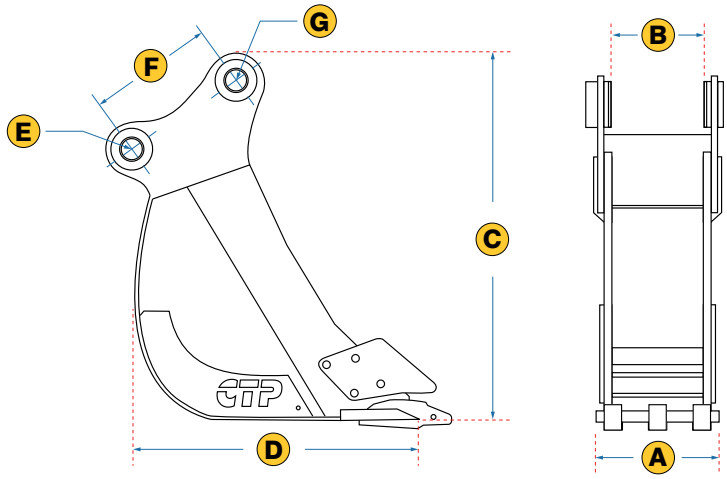

Part No.	A	B	C	D	E	F	G
CTP-315-ST-12	305	281	1243	1324	70	463	70
CTP-315-ST-18	460	281	1243	1324	70	463	70
CTP-315-ST-24	610	281	1243	1324	70	463	70
CTP-315-ST-30	760	281	1243	1324	70	463	70

NEW
CTP-315 HEAVY DUTY

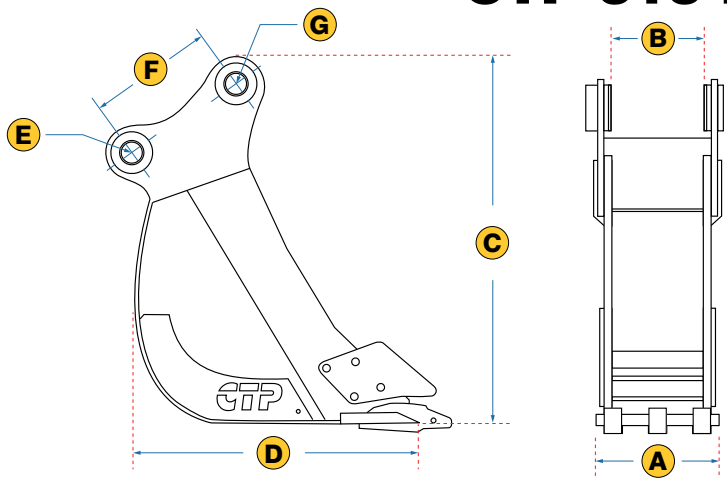

Part No.	A	B	C	D	E	F	G
CTP-315-HD-18	460	281	1243	1324	70	463	70
CTP-315-HD-24	610	281	1243	1324	70	463	70
CTP-315-HD-30	760	281	1243	1324	70	463	70
CTP-315-HD-36	914	281	1243	1324	70	463	70

* Other part no. not included in the list are available. Please contact your sales representative if you have any questions. Part Numbers are used for reference purposes only.

Quality with Value Guaranteed™

CTP-320 STANDARD

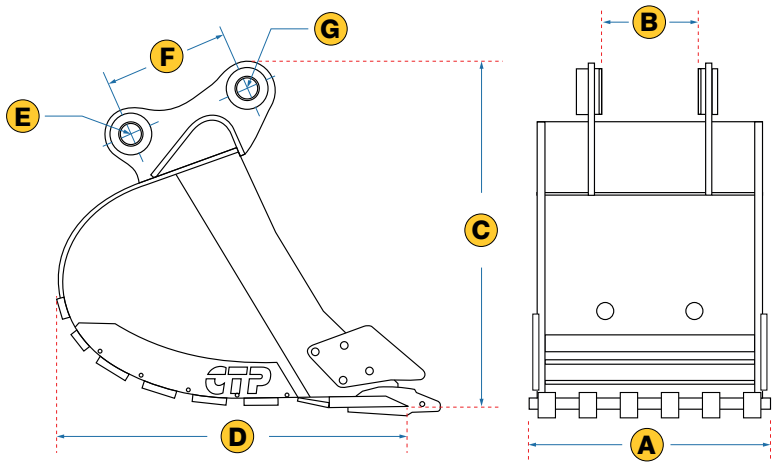

Part No.	A	B	C	D	E	F	G
CTP-320-ST-18	460	311	1319	1166	80	445	80
CTP-320-ST-24	584	311	1319	1166	80	445	80
CTP-320-ST-30	760	311	1319	1166	80	445	80
CTP-320-ST-36	914	311	1319	1166	80	445	80
CTP-320-ST-42	1070	311	1319	1166	80	445	80

CTP-320 HEAVY DUTY

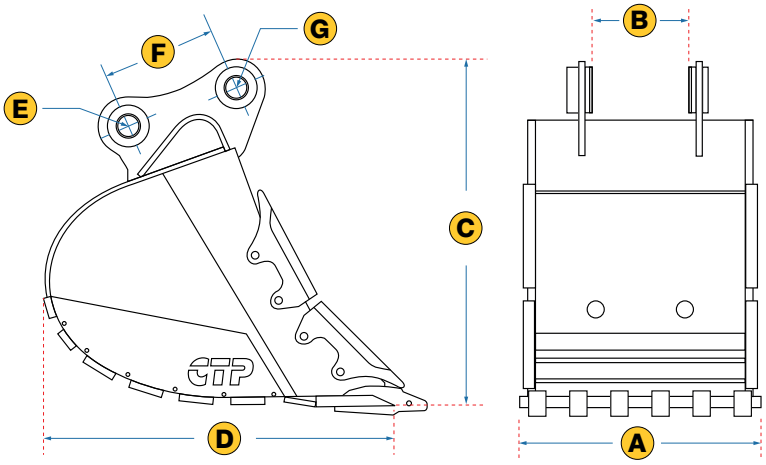

Part No.	A	B	C	D	E	F	G
CTP-320-HD-18	457	311	1405	1488	80	445	80
CTP-320-HD-24	610	311	1405	1488	80	445	80
CTP-320-HD-30	762	311	1405	1488	80	445	80
CTP-320-HD-36	914	311	1405	1488	80	445	80
CTP-320-HD-42	1077	311	1405	1488	80	445	80

CTP-330 HEAVY DUTY

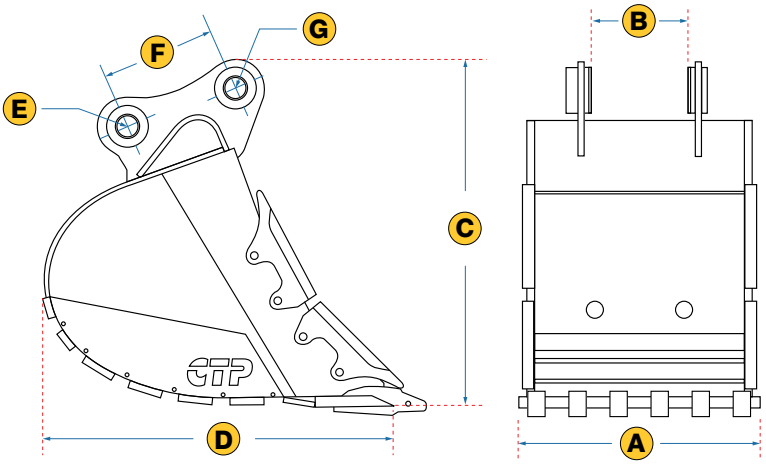

Part No.	A	B	C	D	E	F	G
CTP-330-HD-42	1067	386	1419	1537	90	500	100
CTP-330-HD-48	1220	386	1419	1537	90	500	100
CTP-330-HD-54	1372	386	1419	1537	90	500	100
CTP-330-HD-60	1524	386	1419	1537	90	500	100

* Other part no. not included in the list are available. Please contact your sales representative if you have any questions. Part Numbers are used for reference purposes only.

Quality with Value Guaranteed™

CTP-330 HEAVY DUTY CB

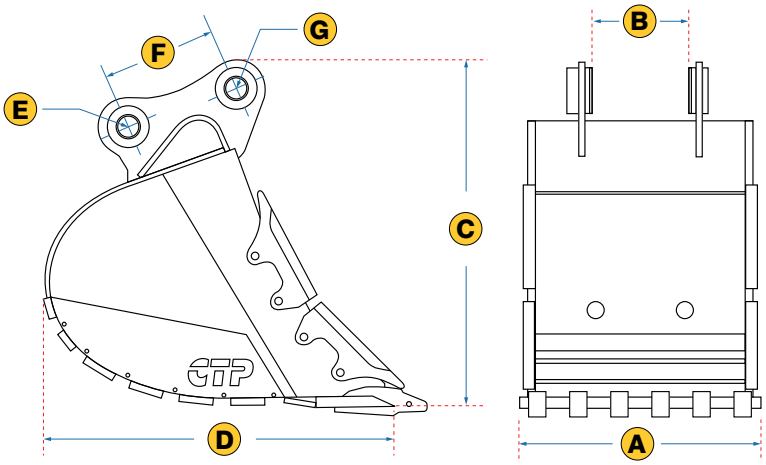

Part No.	A	B	C	D	E	F	G
CTP-330-HD-42-CB	1067	351	1442.2	1420.4	90	485	90
CTP-330-HD-48-CB	1220	351	1442.2	1420.4	90	485	90
CTP-330-HD-54-CB	1372	351	1442.2	1420.4	90	485	90
CTP-330-HD-60-CB	1524	351	1442.2	1420.4	90	485	90

NEW

CTP-336 HEAVY DUTY

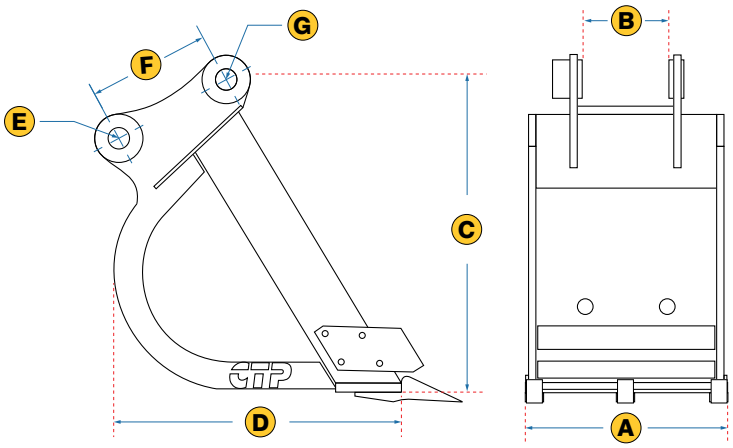

Part No.	A	B	C	D	E	F	G
CTP-336EL-HD-54	1372	386	1419	1537	90	500	100
CTP-336-HD-48	1220	386	1419	1537	90	500	100
CTP-336-HD-56	1422	386	1419	1537	90	500	100

CTP-416 STANDARD

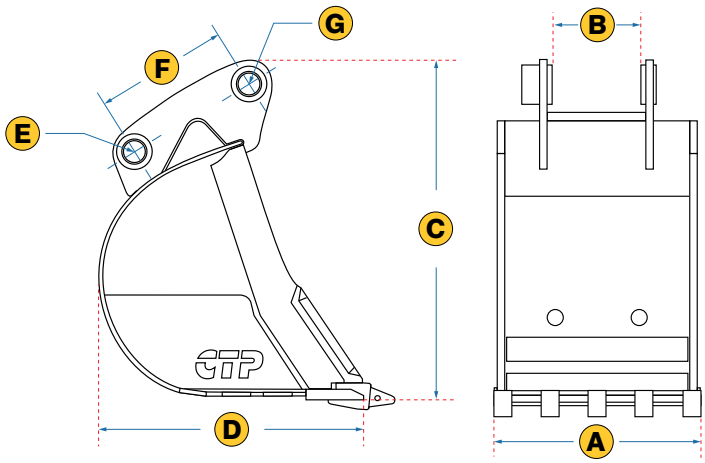

Part No.	A	B	C	D	E	F	G
CTP-416-ST-12	300	256	857	693	45	345	50
CTP-416-ST-18	450	256	857	693	45	345	50
CTP-416-ST-24	600	256	857	693	45	345	50
CTP-416-ST-30	760	256	857	693	45	345	50

* Other part no. not included in the list are available. Please contact your sales representative if you have any questions. Part Numbers are used for reference purposes only.

Quality with Value Guaranteed™

CTP-420 STANDARD

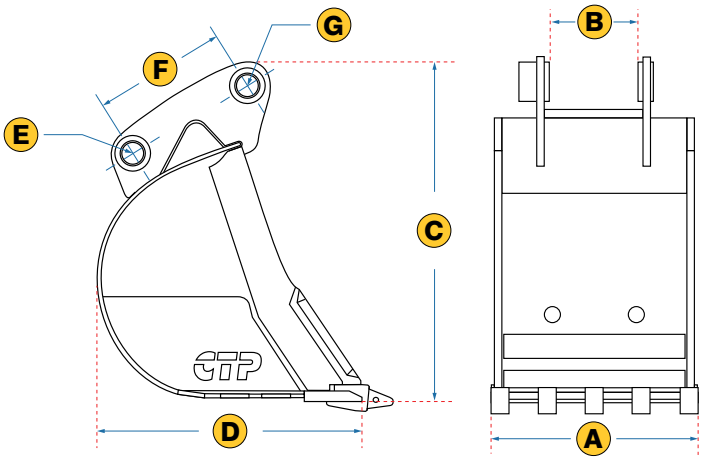

Part No.	A	B	C	D	E	F	G
CTP-420-ST-12	300	256	857	693	45	345	50
CTP-420-ST-18	450	256	857	693	45	345	50
CTP-420-ST-24	600	256	857	693	45	345	50
CTP-420-ST-30	760	256	857	693	45	345	50

YOU'LL DIG OUR BUCKETS... *GUARANTEED*

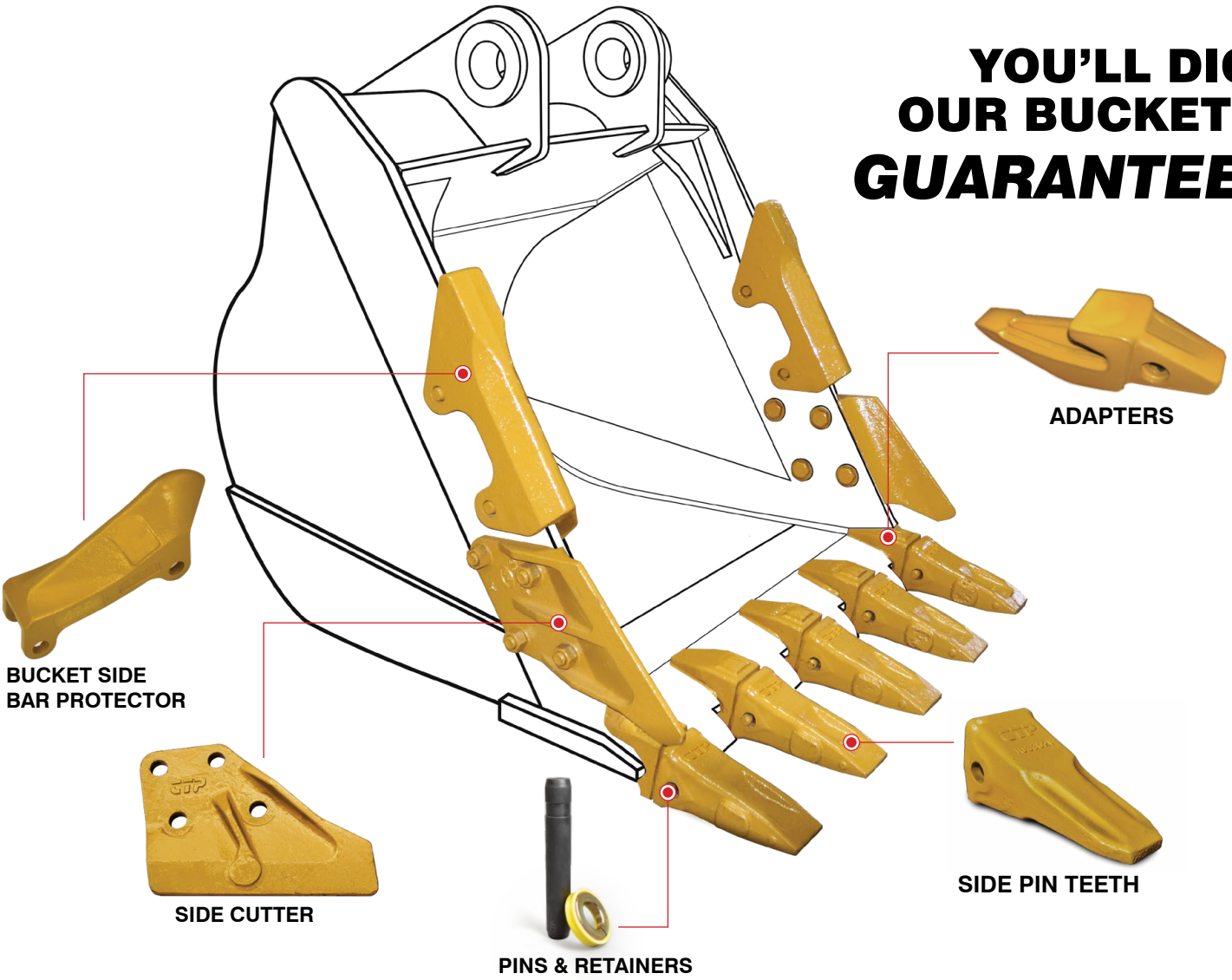

* Other part no. not included in the list are available. Please contact your sales representative if you have any questions. Part Numbers are used for reference purposes only.

Quality with Value Guaranteed™